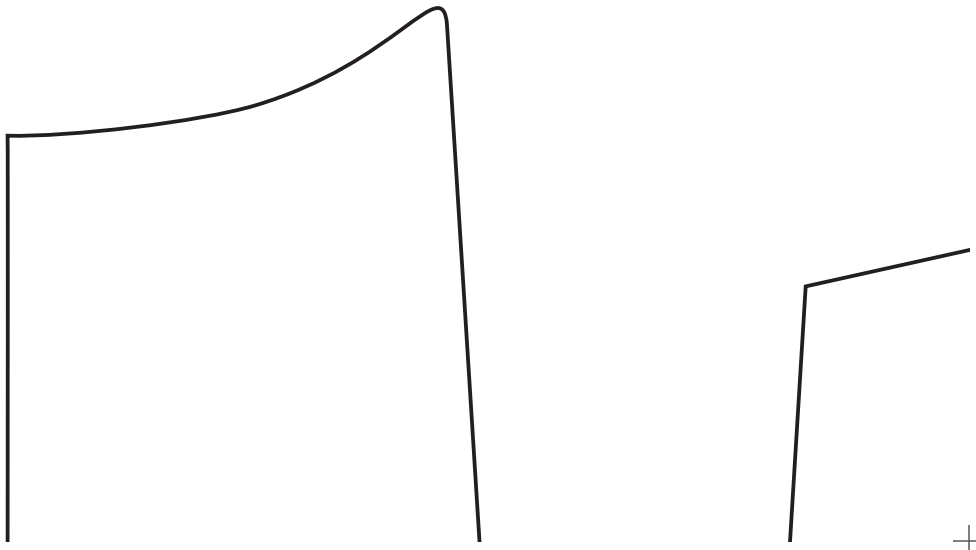

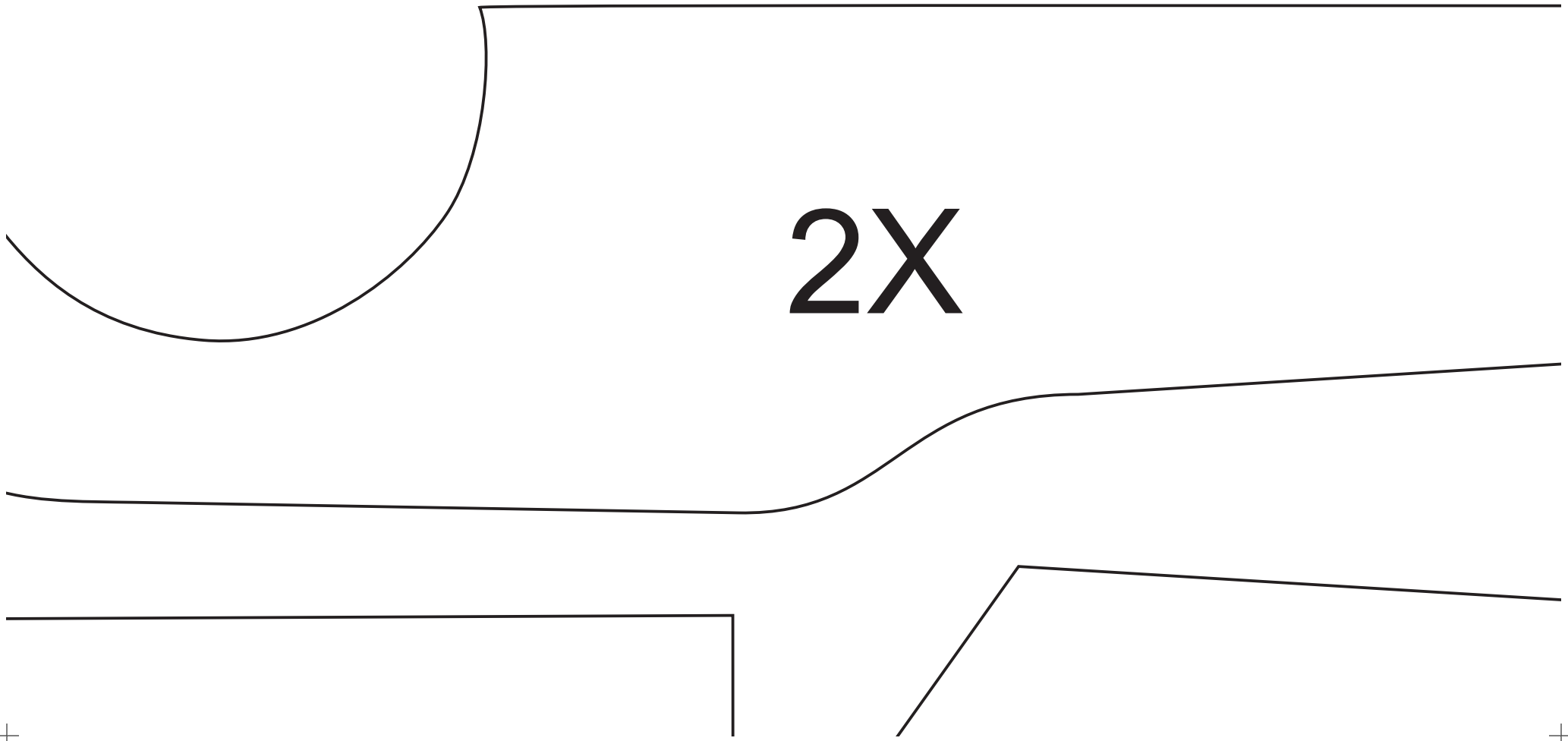
2X

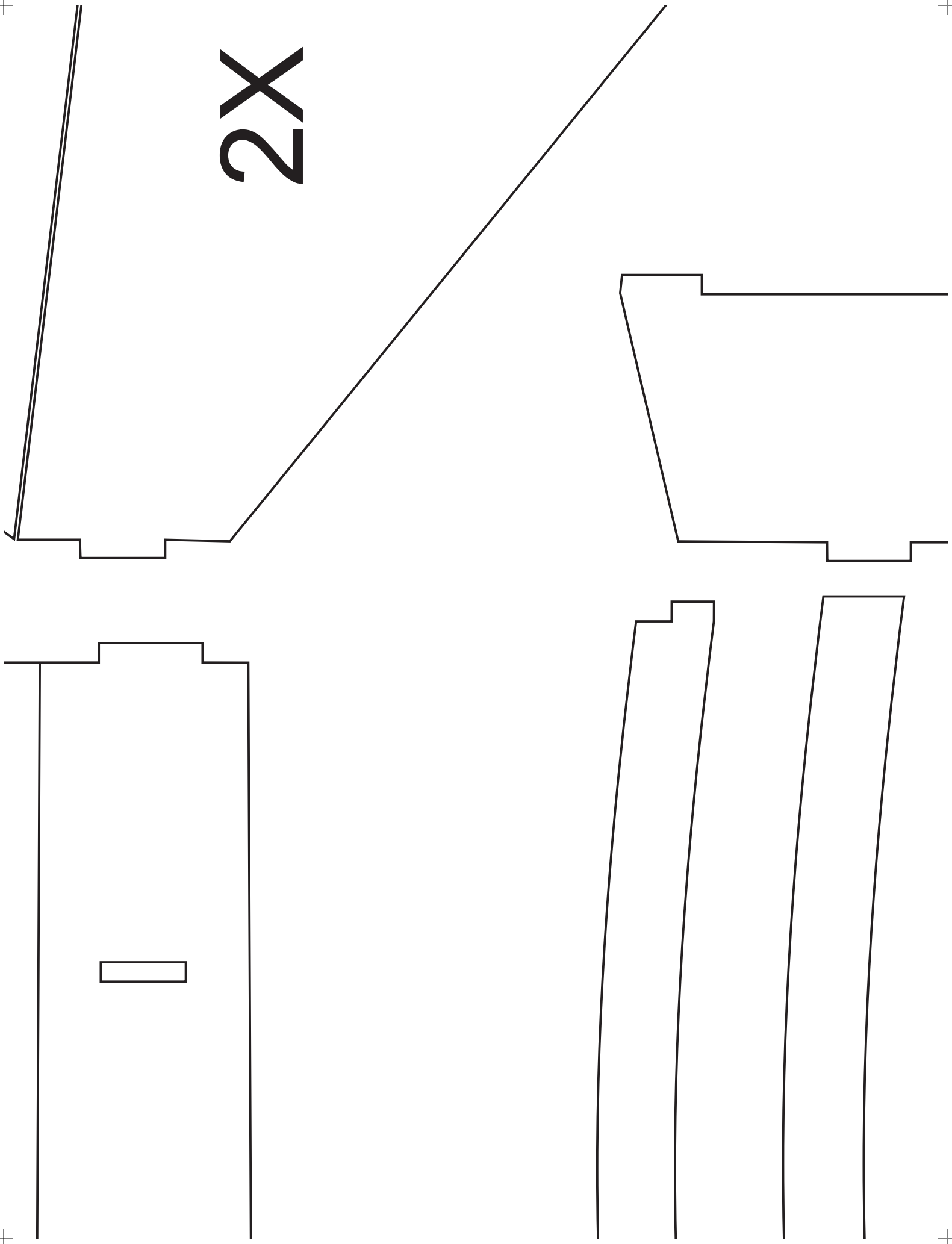
2X

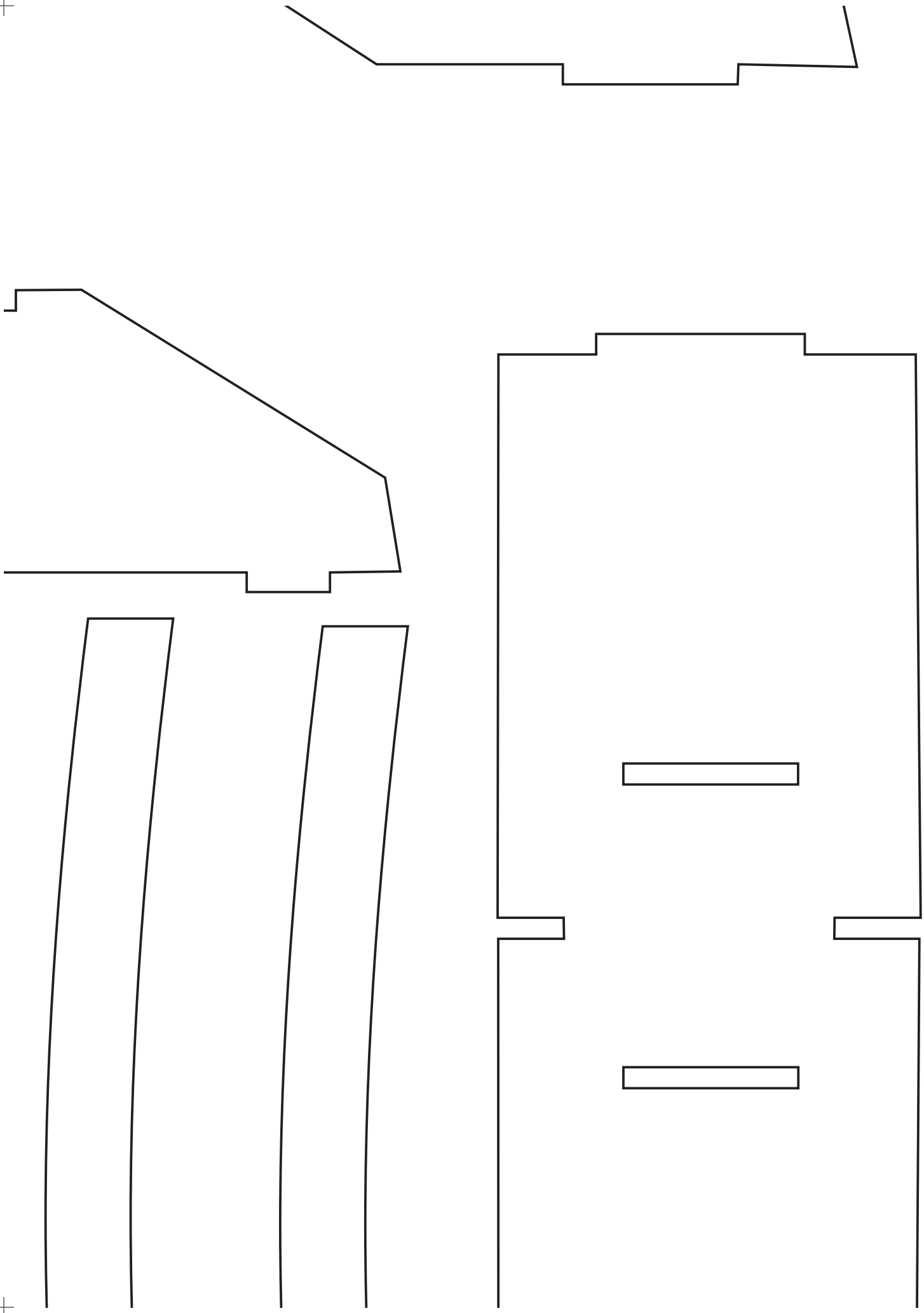

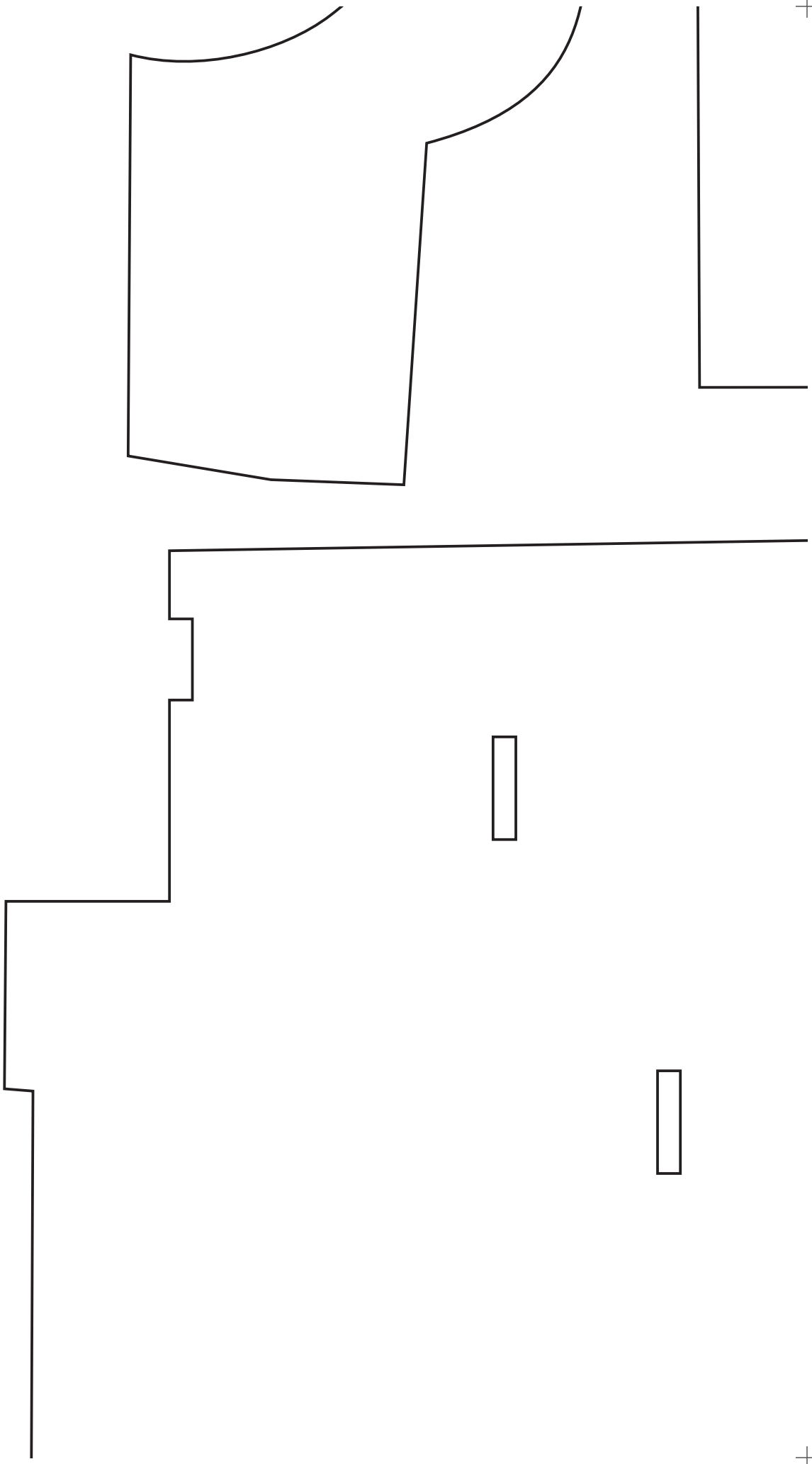

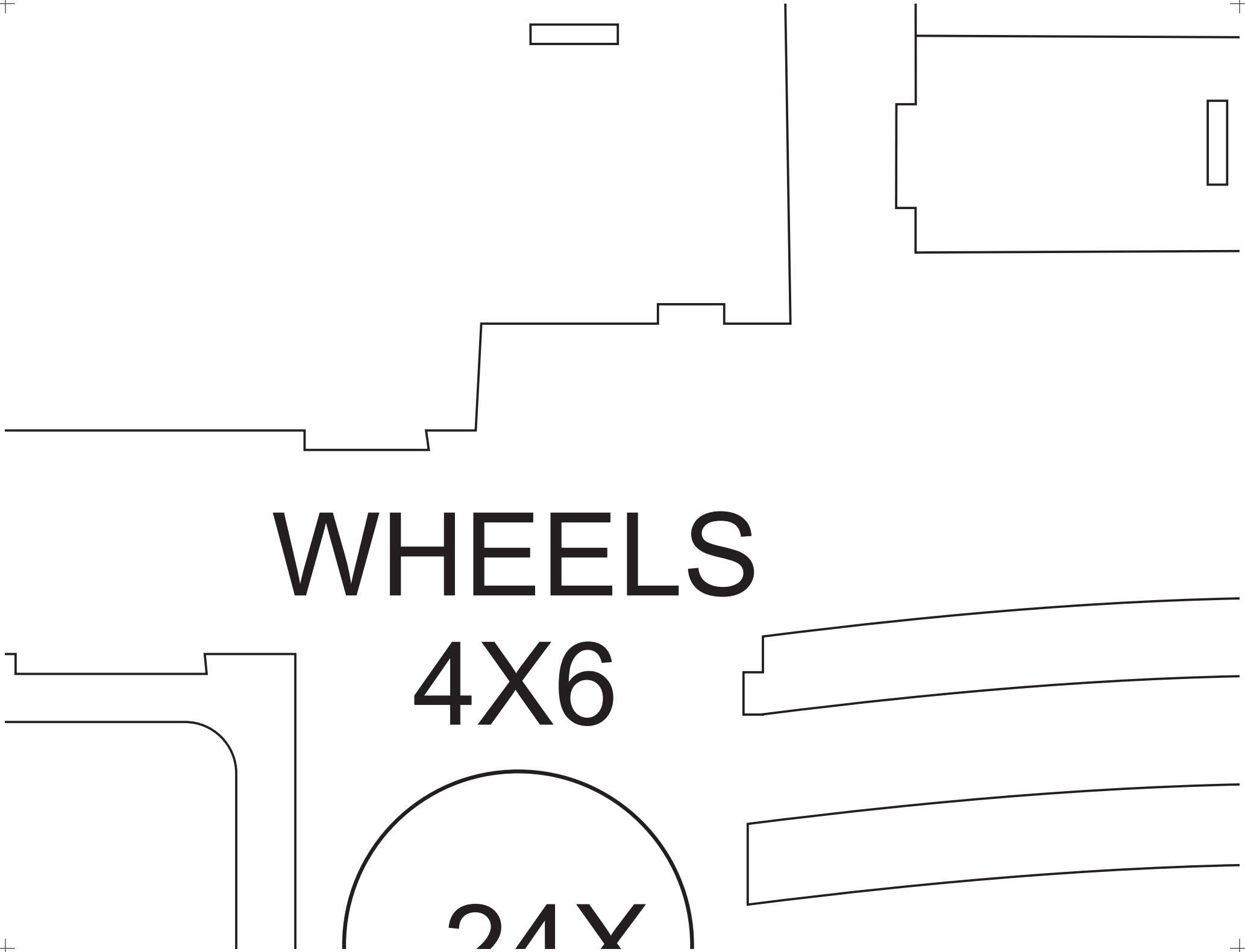
WHEELS
4X6
24X

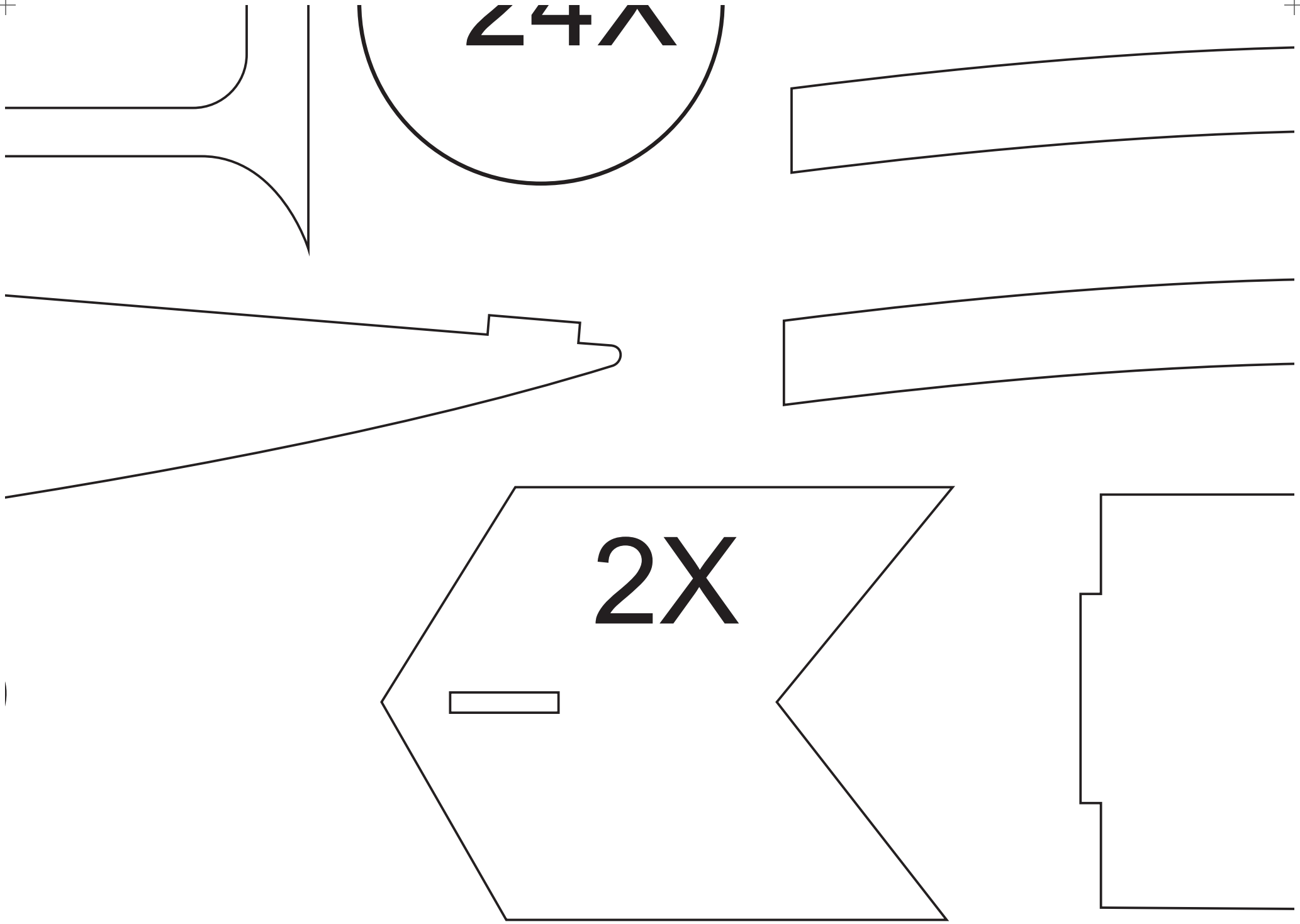
24X
2X

uck

5mm depron

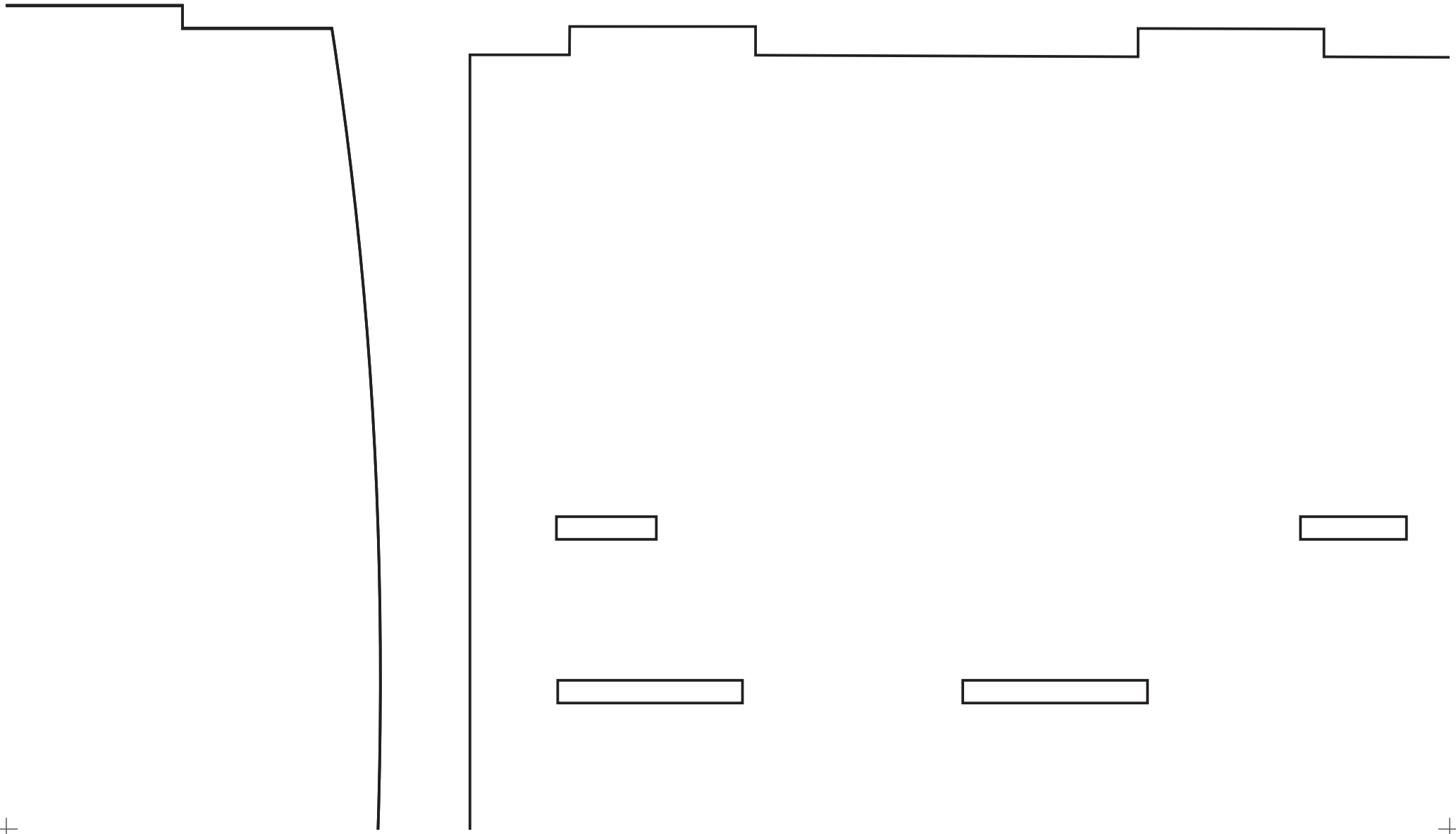

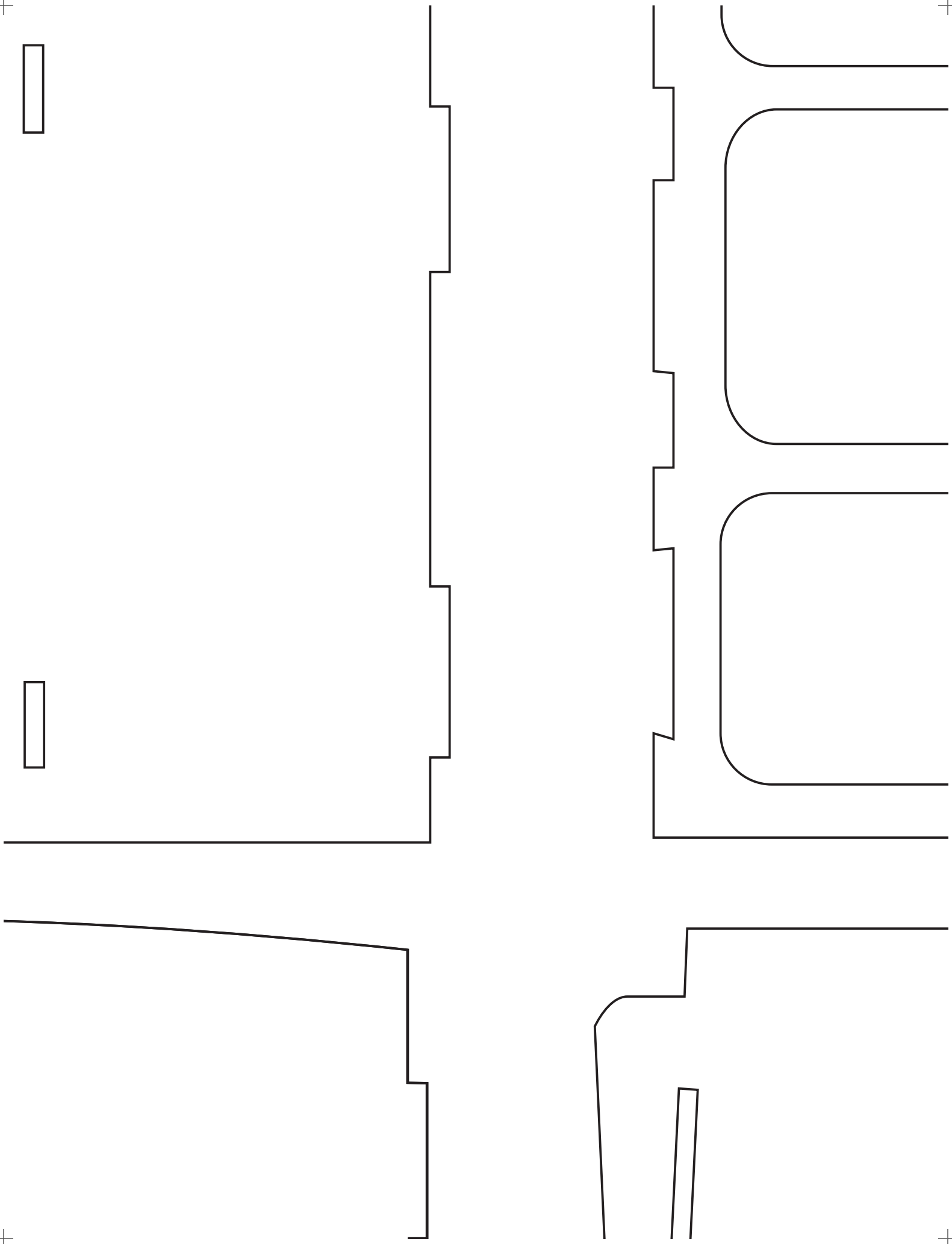

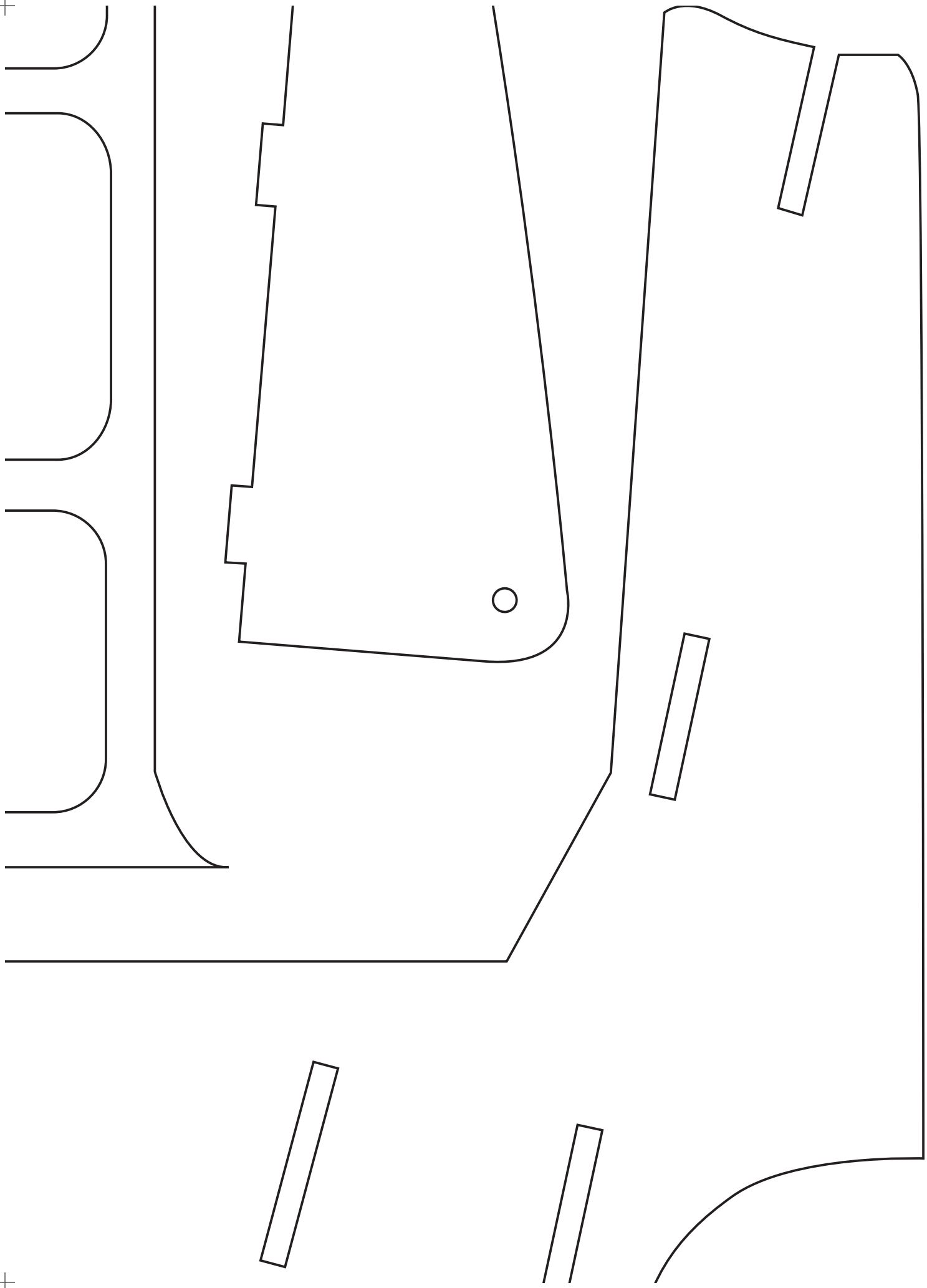

Flying Tru

Made of

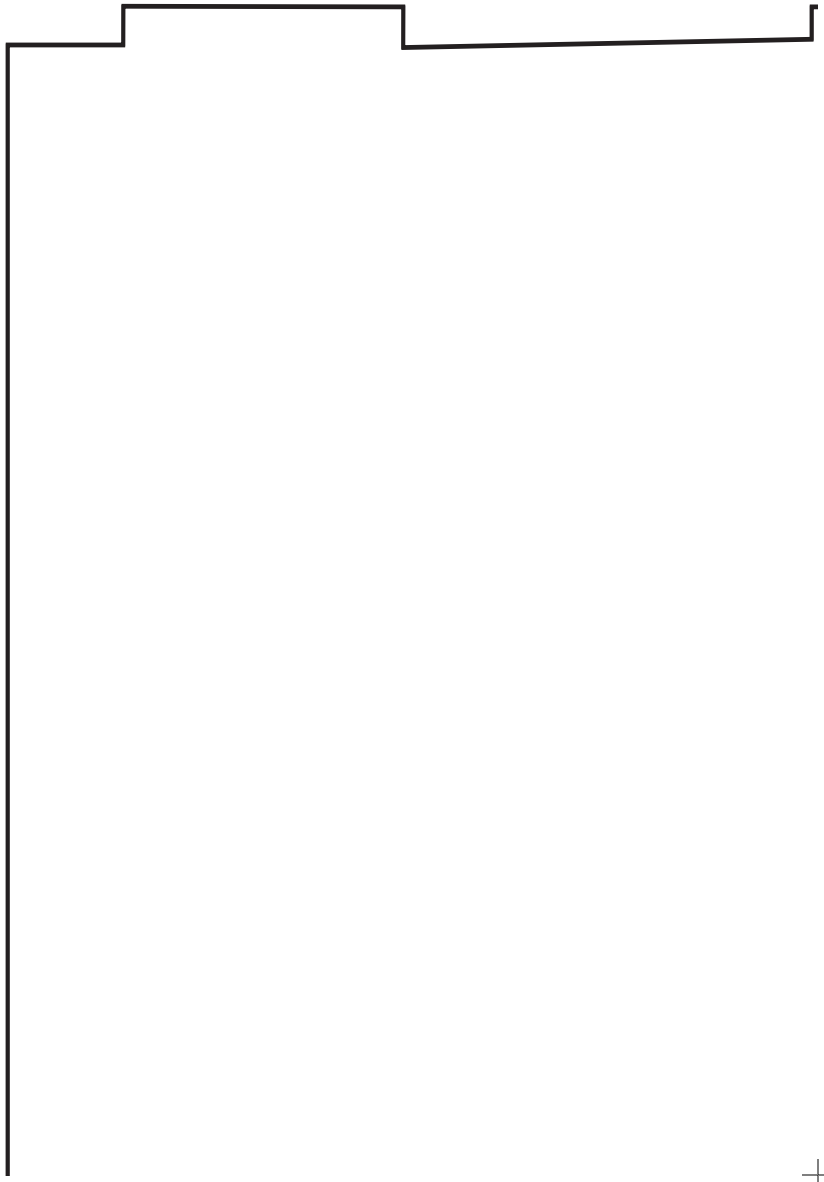

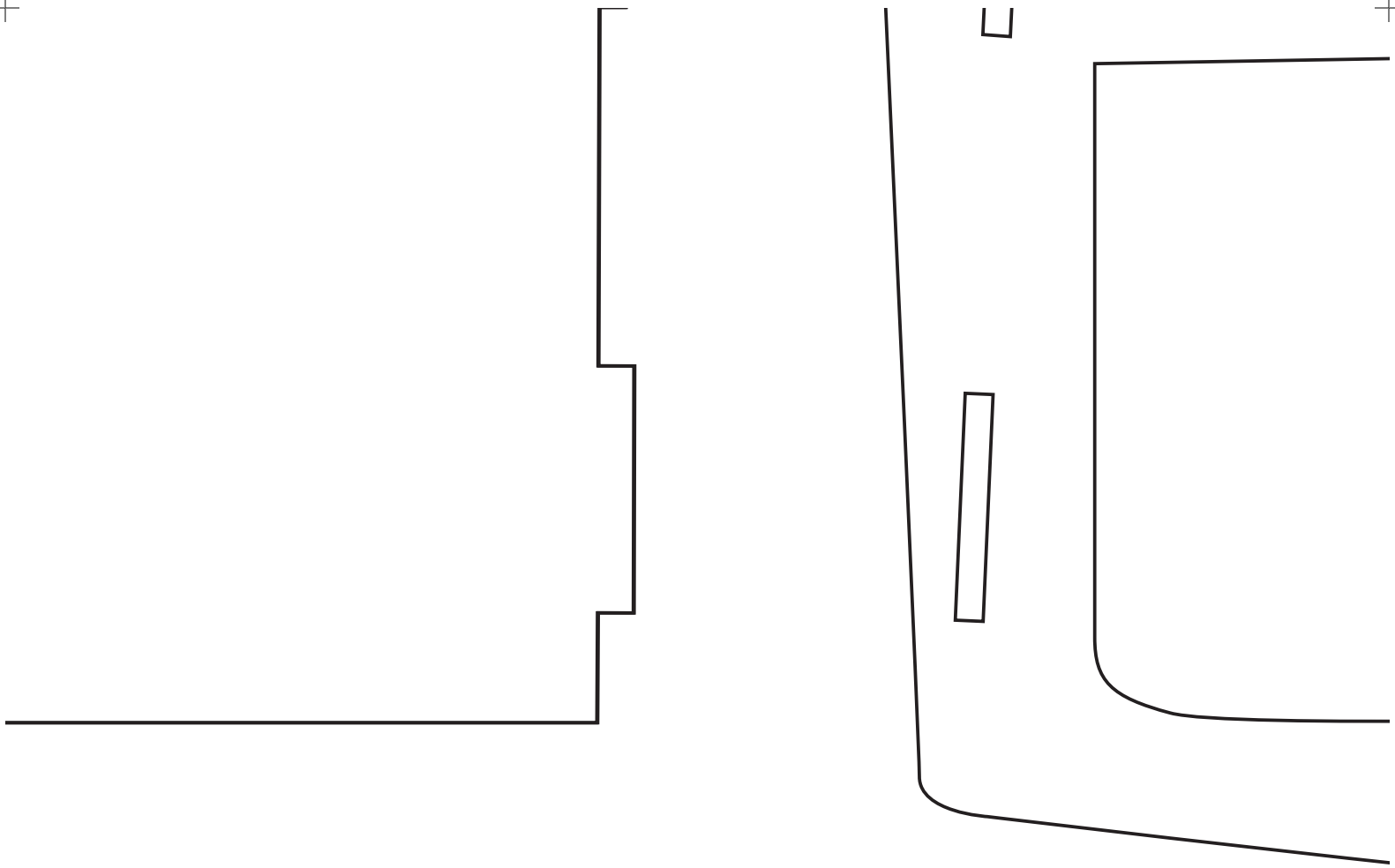

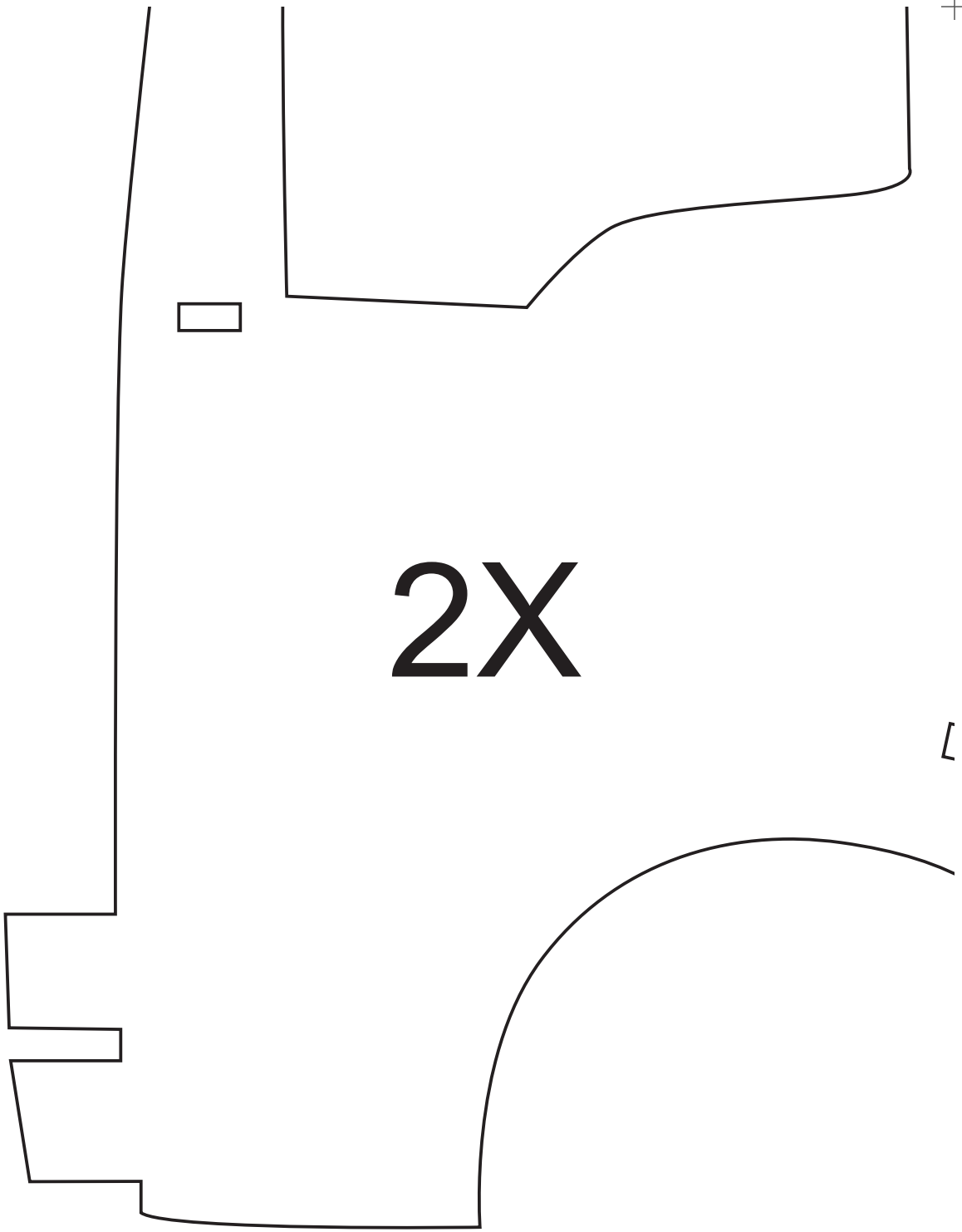
2X